BAWG 058-GBR-0
07/2009

Assembly and Service Manual

BARREL COUPLING TKSGB

Content

Chapter Page

1 Initial considerations

- The barrel coupling is supplied in a complete unit, ready to be mounted, but not provided with lubricant.

Before putting it into service it must be lubricated with the appropriate lubricant in the required quantity, as indicated in chapter 4.

- If it is necessary to dismantle the supplied coupling (i.e. for the machining of the hub when it was supplied in pilot bored condition or for the shrink fit setting-up), make sure that the hub and the sleeve-flange pair must not be interchanged between different units and assembly has to be done in the same relative position as it was supplied. This is achieved by making coincide the marked tooth of the hub with the corresponding marked tooth of the sleeve-flange (reference Fig. 1 assembly marks).

- The external and internal covers of one TKSGB, designed as axial bearing support type, must not be interchanged with parts of other coupling units!

- This type of coupling is designed specially as a bearing support type in order to absorb the axial efforts generated during the service and convey them through the structure to the gearbox or through the drum and the opposite side support.
- Fixing screws of the coupling to the drum must have a 10.9 quality. The tightening torque is given in table 1.

Table 1 Tightening torques

Screw	M12	M16	M20	M24
Torque (Nm)	110	280	540	940

2 Setting-up on the Reducer shaft

2.1 Hub-shaft connections by means of keys, splines, etc.

- Clean the surfaces of the hub and the shaft.
- Pre-heat the complete coupling by putting it into a bath of hot oil at a temperature which must not exceed 80℃ so that the joints are not damaged. The oil of that bath must not attack those components manufactured on a Nitrile base.
- Mount the hub on the shaft avoiding to bump it and wait until the coupling has cooled down.
- Check that “package” composed by sleeve flange and the covers is free to move a certain value in angular rotation sense (minimum ± 1,5º). The only possible effort to move should be because of inside O-ring pressure. It is important that covers and hub crowned pair areas are not radially blocked but with small gap to allow correct bearing support effect.

2.2 Hub-shaft connection by means of interference without keys

In this case it is necessary to separate the hub from almost the rest of coupling parts. (Refer to figure 1 for item nrs).

Important Preliminary Remark:

Before starting to dismount the parts of one coupling unit, make sure that hub item 1, sleeve item 2, external cover item 3, and internal cover item 4 are properly identified in order to use exactly the same parts when mounting again, without mixing with other similar parts corresponding to other units.

- Unfasten screws, item 10, and remove external cover, item 3.
- Remove carefully O-ring, item 8, on this side.

- **Do not remove** retainer ring, item 6, and Seeger ring, item 7, on this side. They can be heated together with the hub, item 1, without any problem. If you decide to remove them please be aware that afterwards the space to mount will be, typically, very limited towards the gearbox once the hub is mounted onto the shaft. Trying to mount the rings, item 6 and item 7, onto the heated hub before placing them onto the shaft can be dangerous and is not recommended because delay of assembly means lost of heated temperature level.
- Unfasten screws, item 9, and remove internal cover, item 4.
- Remove carefully O-ring, item 8, on this side.
- Remove now Seeger ring, item 7, of this side, and remove as well thrust retainer ring, item 6. Generally if doing in vertical position be aware that barrels , item 5, get free to fall down.
- Remove the barrels, item 5, and then the sleeve, item 2.
- Now you can proceed to heat the hub to the appropriate temperature for its mounting. No matter which heating method is applied, it must be progressive along the whole surface, avoiding any localized heating spots. As an indication, a maximum temperature of 200ºC is usually enough for this operation.
- Before you start mounting the heated hub onto the shaft, insert and hold carefully in place the external cover, item 3, together with screws & washers, item 10, and one O-ring, item 8. Make sure that O-ring gets no contact with the heated hub,
- Mount the heated hub on the shaft until reaching a reference-mark previously set or until the hub face matches the shaft end. At this stage it is crucial to avoid any contact between the hot hub and the O-ring seal.
- Before continuing with the procedure, let the hub cool down to room temperature.
- Mount the O-ring seal, item 8, on the gearbox side in its groove.
- Mount the corresponding pair sleeve-flange, item 2, over the hub, checking that the matching position reference of both is correct. (See Fig. 1). Screws & washers, item 9, have to be inserted in the sleeve properly in their place.
- House the barrels, item 5, in their cavities.
- Mount properly in place the retainer thrust ring, item 6, being aware that one of the radial holes in the ring is just coincident with the overflow hole, item 12, in the hub.
- Mount properly in place the Seeger-ring, item 7, by using specific proper tooling in order to avoid personal damages.
- Mount the second O-ring seal, item 8, on the drum side in its groove.
- Mount the internal cover, item 4, centered into the sleeve flange, item 2, and fit it with the screws, item 9.

- Mount the external cover, item 3, centered into the sleeve flange, item 2, and fit it with the screws, item 10. Be aware that this cover has one specific position on its circunference given by the position of wear-index, item 13, to be in between the control marks on the hub. When tightening the screws, do it first alternatively over opposite positions to guarantee good centered seat of cover. Then, tighten, **one by one, all the screws around** to the specified torque.
- Check if the coupling is free to move a certain value in angular rotation sense (minimum ± 1,5º). The only possible effort to move is caused by the inside O-ring pressure. It is important that covers and hub crowned pair areas are not radially blocked but with small gap to allow correct bearing support effect.

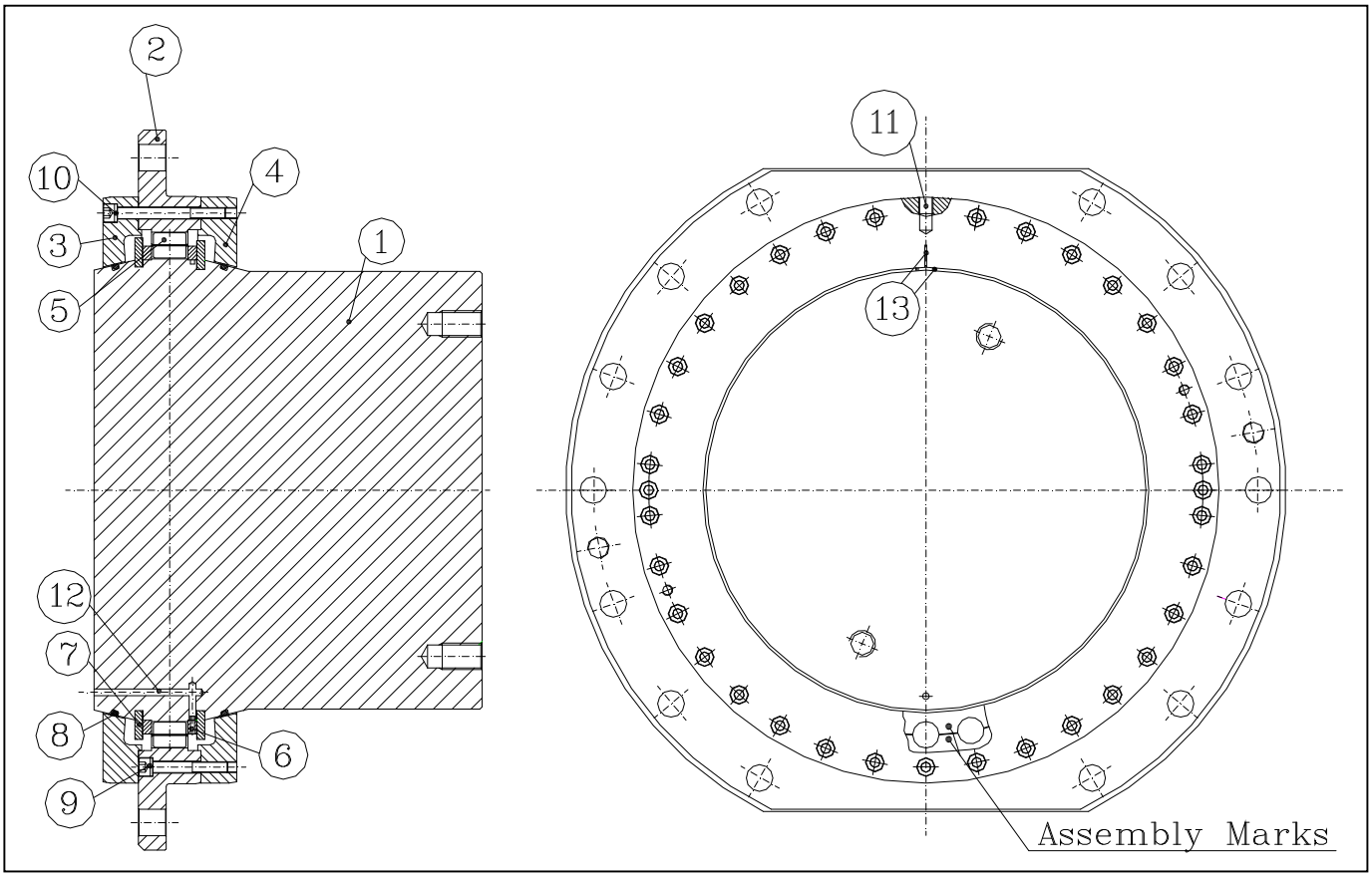

1. Hub	8. Joint
2. Sleeve	9. Screw + waher
3. External cover	10. Screw+washer
4. Internal Cover	11. Grease inlet with plug
5. Barrel	12. Grease overflow hole
6. Retaining ring	13. Wear index & control marks
7. Seeger ring	

Fig.1

3 Alignment

Once the coupling has been fixed to the drum flange, the angular alignment is checked by measuring the gap "X", Fig. 2 at four points with a separation of 90° by using a reference ruler. The maximum difference between the 4 measurements to the height of the external part of the sleeve-flange must not exceed the following values:

0,3 mm, for sizes ≤ TKSGB-600
0,6 mm, for sizes ≥ TKSGB-1000

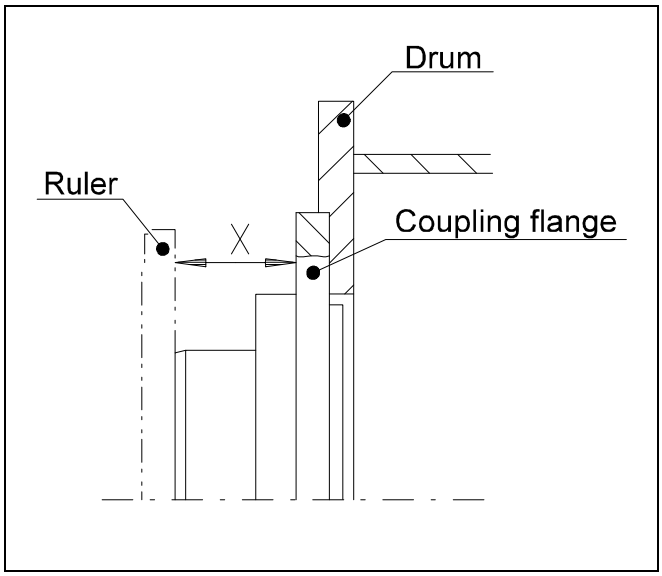

Fig. 2

4 Lubrication

Before putting the coupling into service, the internal chamber has to be filled with lubricant EP2 (Extreme Pressure additive and consistency NLGI-2). The plugged inlet hole, item 11, at the external cover is suitable for placing a tubular extension up to the external part of the drum, making access easier. In practice, lubricant must be fed until it comes out of the lubricant overflow hole, item 12, at the opposite part of the hub. Table 2 shows the approximate amount depending on the different sizes.

Table 3 shows several references of appropriate lubricants for temperatures of –20℃ up to 80℃. Please ask for advice if temperatures are ou t of that range.

Table 2 Grease quantity

TKSGB	200	400	600	1000	1500	2600	3400	4200	6200
dm^3	0,19	0,45	0,57	0,65	0,72	0,9	1,0	1,3	2,0

Table 3 Grease type (-20ºC ÷ +80ºC)

Reference	Producer
CENTOPLEX 2 EP	KLÜBER LUBRICATION
VERKOL EP2	VERKOL, S.A.
AGUILA Nº 850 EP-2	BRUGAROLAS
BP Energrease LS-EP 2	B.P.
SHELL alvania EP-2	SHELL
MOBILUX EP2	MOBIL
BEACON EP2	ESSO

5 Maintenance

5.1 Lubrication periodicity

Depending on the operating conditions, the lubricant must be completely renewed every 2000 or 3000 hours of operation and as a minimum, once a year.

For its renewal, feed the lubricant through the inlet hole, item 11, ejecting the used lubricant through the overflow hole, item 12. When new lubricant starts coming out of this overflow hole it means that the operation has been completed.

5.2 Periodical inspections

Check at least the following points once a year:

- **Tightening of all the screws** to the recommended values and replacement of damaged ones.

- **Internal wear of the teeth** - The position of the index mark, item 13, in relation to the control marks on the hub, Fig. 3, are an indicator of the state of the flanks wear. When the equipment is new, the index mark is centered (case a). When it reaches the limit (case b) the whole coupling has to be replaced.

Table 4 shows the maximum permissible wear values,"m/2**", for applications which imply one only sense of loading (typical case of the hoisting in cranes). In applications of reversible loading sense, the amplitude between the marks must be divided by 2.** Unless it is expressly asked for, couplings are generally supplied with the marks according to the aforementioned table and therefore, it is advisable to modify them, if the application requires so, in order to correctly asses the wear evolution.

- Angular free floating and alignment

- Seals control – If any deterioration appears on the sealing or grease leakage, then the seals have to be replaced.

Table 4 Wear control

TKSGB	200	400	600	1000	1500	2600	3400	4200	6200
"m/2" (mm.)	6	6	8	8	8	8	8	8	8

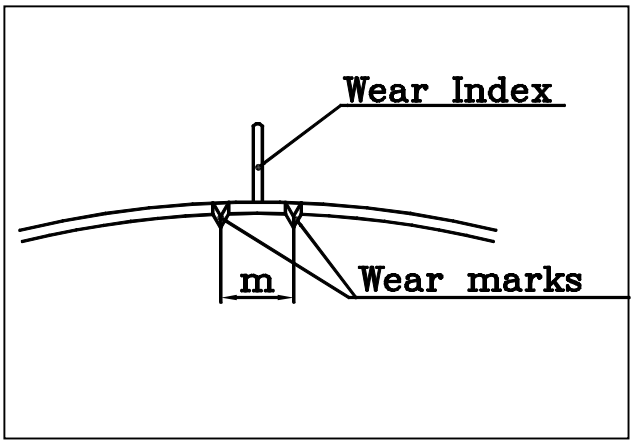

Fig. 3 Between marks → OK

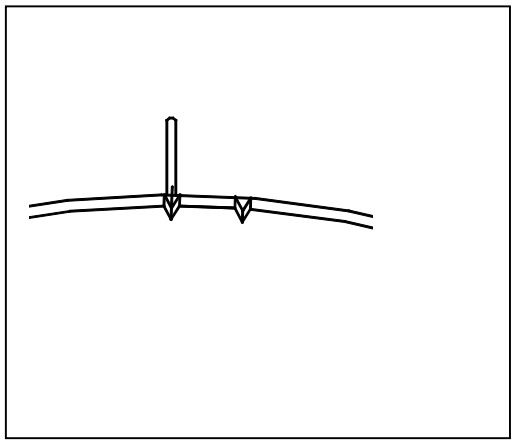

Fig. 4 Wear limit